W6BHZ

TELEX

TELEX COMMUNICATIONS, INC.

ORDER No. 388S
TH3-MK4 THUNDERBIRD
3 - Element, 10, 15, 20 meter beam
PN 802442-1

INSTRUCTION MANUAL

General Description

The Hy-Gain TH3-MK4 is a 3 element, 3 band beam antenna designed for operation on the 10, 15, and 20 meter amateur bands. The TH3-MK4 uses Hy-Gain's full power "Hy-Q" traps, and Hy-Gain's rugged boom-to-mast bracket. The TH3-MK4 will mount on a standard 2" O.D. mast and can be rotated with Hy-Gain's CD-45II or HAM-IV rotators. All hardware is stainless steel.

New features in the TH3-MK4 compared to the TH3-MK3 include - all stainless steel hardware, a new Beta-match, 3 settings, and a 4 piece boom - ideal for DXpeditions!

The TH3-MK4 is designed to be a compact, easy-to-assemble, 3 element beam. Because of these constraints, the TH3-MK4 will also have narrow VSWR bandwidth. Three settings are provided for greater flexibility in construction and use.

Specifications

Electrical:

Gain (ave.)	5.8 dBd (8.0 dBi)
Front-to Back Ratio (max.)	25 dB
Maximum power	1500 watts PEP
VSWR at resonance	less than 1.5:1
Input Impedance	50 ohms
Matching system	Beta (DC ground)

Mechanical:

Boom Length	14 ft. (4.3 m)
Boom Diameter	2 in. (51 mm)
Longest Element	27' 5" (8.36 m)
Turning Radius	15' 4" (4.67 m)
Accepts Mast	1.9 to 2.5 in. (48 to 64 mm)
Net Weight	35 lb. (16 kg)
Shipping Weight	40 lb. (18 kg)
Maximum Wind Survival	95 mph (153 kmph)
Wind Surface Area (max.)	4.6 sq. ft. (0.4 sq.m.)
Effective Moment (mass x radius)	537 ft. lb.
Wind Load at 80 MPH	118 lb. (53.6 kg)
Hardware	All Stainless Steel
Suitable Rotators	Hy-Gain CD-45II, HAM IV, or HAM V

Preparation for Assembly

FOR OUR OVERSEAS CUSTOMERS: The United States uses American units of measurement. Please see page 10 of this manual for American-to-Metric conversion. Most illustrations include both American and Metric dimensions.

When unpacking your antenna, check inside of all tubing for smaller tubes and traps. To conserve space and protect traps, these parts are packed this way. Check all parts against the parts list to ensure no parts are missing.

Choose a large, clear area to assemble your TH3-MK4 antenna. The area must be at least 14' x 28' (4.3 m x 8.6 m). You may wish to use a temporary mast to support the boom during assembly.All tubing supplied with the TH3-MK4 telescopes together. Make all measurements to the given dimensions, plus or minus no more than 1/8 inch (3 mm).

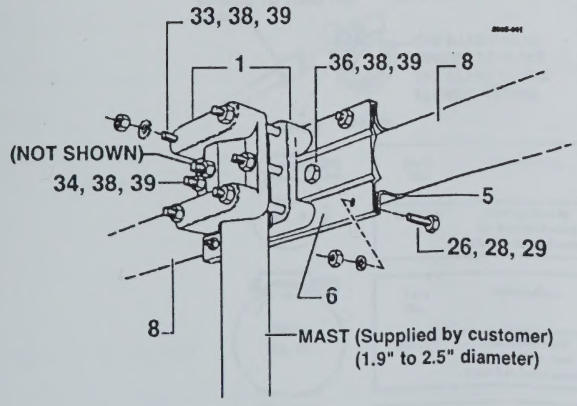

Figure 1
Boom-to-Mast Bracket

The following tools are required for easy assembly of the TH3-MK4:

Tape Measure	12 foot
Nut Drivers	5/16", 3/8", 7/16", 1/2" (8, 9.5, 11, 12.7 mm)

Assembly of the Boom

Select the boom-to-mast clamps (Items 5 and 6). Loosely assemble them on the drilled ends of the two boom sections (Item 8) using the 1/4"-20 x 3/4" bolts, 1/4" nuts and lockwashers (Items 26, 28, and 29). Secure the booms to the bracket using the two 5/16"-18 x 2 3/4" screws, nuts and lockwashers (Items 36, 38, and 39). Tighten these six bolts securely.

Assemble the two cast aluminum brackets (Item 1) on your temporary mast about 4 feet (1 m) above ground. Secure the two brackets together using the two 5/16"-18 x 3" bolts, nuts and lockwashers. Tighten these two bolts evenly until the brackets are snug.

Attach the boom assembly to these two brackets using the four 5/16"-18 x 5" bolts, nuts and lockwashers (Items 33, 38, and 39). Tighten these four bolts just enough to hold the weight of the antenna.

Assemble the remaining two boom sections (Item 7) to the ends of the assembled boom using 1/4"-20 x 2 1/2" screws, nuts, and lockwashers. Tighten securely.

Item No.	Description
1	Mast Bracket, cast aluminum
5	Clamp, boom to bracket
6	Bracket, Casting to boom
7	Tube, 2" x .049 x 42 1/2"
8	Tube, 2" x .049 x 46-1/2", swaged
26	Bolt, 1/4"-20 x 3/4", hex head, stainless steel
28	Nut, 1/4"-20, hex, stainless steel
29	Lockwasher, 1/4", internal, stainless steel
33	Bolt, 5/16"-18 x 5", hex head, stainless steel
34	Bolt, 5/16"-18 x 3", hex head, stainless steel
36	Bolt, 5/16"-18 x 2 3/4", hex head, stainless ste
38	Nut, 5/16"-18, hex, stainless steel
39	Lockwasher, 5/16", split, stainless steel

Element-to-Boom Brackets

There are two sizes of element-to-boom brackets supplied. The largest (Item 4) has a 1 1/2" I.D., and is used only on the driven element.The remaining brackets (Item 3) have a 1 1/4" I.D., and are used on the reflector and director elements.

Assemble the brackets as shown in Figure 2 and position them on the boom as shown in Figure 8. It is easier to assemble the brackets on the boom at the correct location, rather than try to slide them on the boom. If you are going to leave this assembly unattended for more than 15 minutes, we suggest that you tighten the eight (8) bolts on each bracket, so that they do not vibrate off. Do not tighten the two (2) anchor bolts (Item 25) until the elements are installed and aligned.

Item No.	Description
3	Bracket, Element-to-boom, #13
4	Bracket, Element-to-boom, #14
14	Tubing Assy., aluminum, RDE-1, FDE-1, & D-1, 1 1/4" x 48"
23	Insulator, driven element
25	Bolt, 1/4"-20 x 3/8", hex head, stainless steel
26	Bolt, 1/4"-20 x 3/4", hex head, stainless steel
27	Nut, 1/4"-20, square, stainless steel
28	Nut, 1/4"-20, hex, stainless steel
29	Lockwasher, 1/4", internal, stainless steel

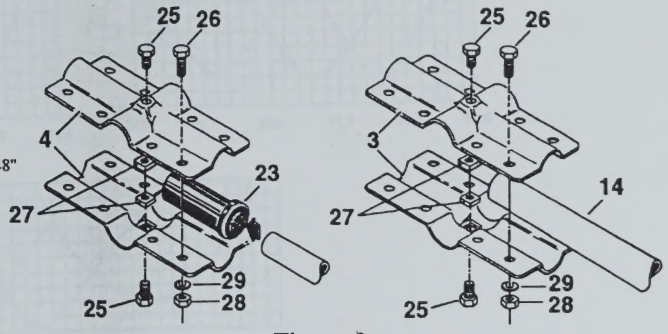

Figure 2
Element-to-Boom Brackets

Tubing Clamp Assembly

Select the proper size tubing clamps as shown in Figure 3. When installing the clamps, place the clamp near the tube end with the top of the clamp over the slot in the tube as shown.

After adjustment of the tubing lengths, tighten the clamp with a 5/16 inch (8 mm) nut driver until the tubing will not twist or telescope. DO NOT overtighten!

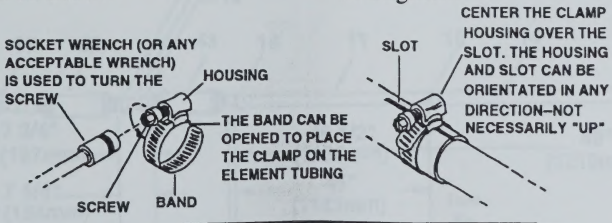
SOCKET WRENCH (OR ANY ACCEPTABLE WRENCH) IS USED TO TURN THE SCREW
HOUSING
THE BAND CAN BE OPENED TO PLACE THE CLAMP ON THE ELEMENT TUBING
SCREW
BAND
SLOT
CENTER THE CLAMP HOUSING OVER THE SLOT. THE HOUSING AND SLOT CAN BE ORIENTATED IN ANY DIRECTION–NOT NECESSARILY "UP"

Part No.	Description	Fit Tubing Sizes
358756	Clamp, Size #6 all stainless steel 5/16" hex head screw	1/2 and 3/4"

Part No.	Description	Fits Tubing Sizes
358757	Clamp, Size #10 all stainless steel 5/16" hex head screw	1"

Part No.	Description	Fits Tubing Sizes
358758	Clamp, Size #16 all stainless steel 5/16" hex head screw	1 1/4"

Figure 3
Tubing Clamp Assembly

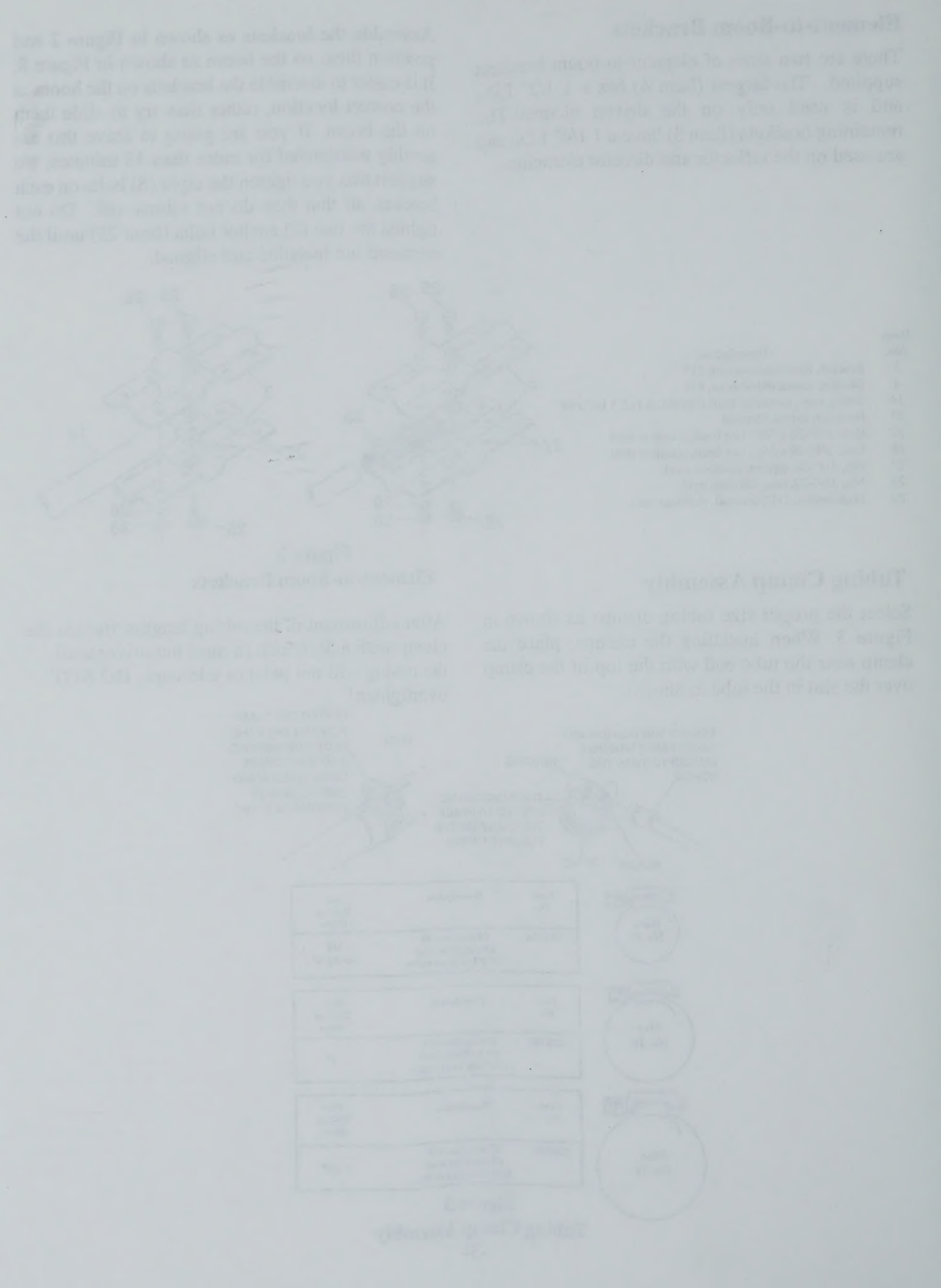

Settings

The TH3-MK4 is supplied with 3 settings - CW, Middle, and Phone. Choose one of these settings to use in assembling this antenna. Typical VSWR curves shown in Figure 4 will help you decide which setting to use.

The VSWR curves are typical for this antenna mounted 70 feet (21.3 m)above ground. Similar curves can be expected for this antenna mounted between 30 feet (9.1 m) and 100 feet (30.5 m) above ground. Do not try to tune this antenna for low VSWR at ground level!

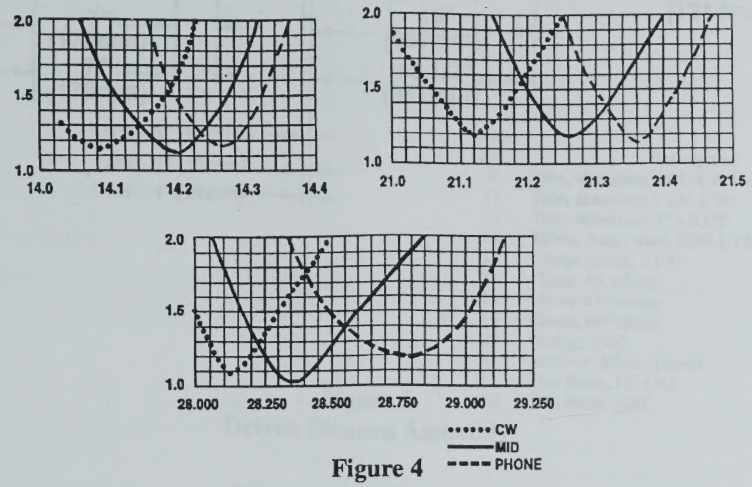

Figure 4
VSWR Curves

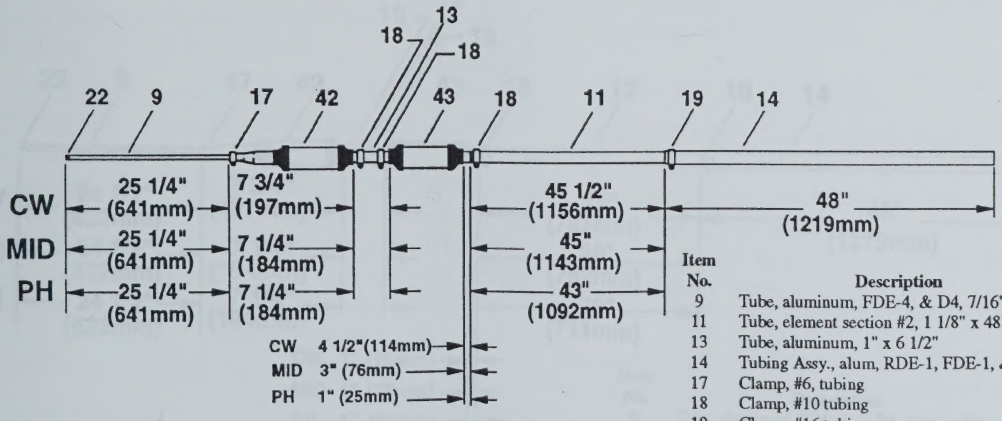

Item No.	Description
9	Tube, aluminum, FDE-4, & D4, 7/16" x 28"
11	Tube, element section #2, 1 1/8" x 48"
13	Tube, aluminum, 1" x 6 1/2"
14	Tubing Assy., alum, RDE-1, FDE-1, & D-1, 1 1/4" x 48"
17	Clamp, #6, tubing
18	Clamp, #10 tubing
19	Clamp, #16 tubing
22	Caplug, 7/16"
42	Trap Beam, 15M
43	Trap Beam, 10M

Figure 5
Reflector Assembly

Element Assembly

Select the remaining tubing parts, traps, and tubing clamps. Assemble each element as shown in Figures 5, 6, and 7. Install all traps with drain holes on the bottom and labeled end toward the boom. There are two kinds of 15 meter traps: Part No. 878694 is used on the reflector and director and Part No. 878637 is used on the Driven Element.

Mark each element with an indelible marker. Use "R" for the reflector sections, "DE" for the driven element sections, and "DIR" for the director sections. Install the driven element insulators (Item 23) and the 1 1/4" tubing clamp assemblies onto the large ends of the driven element sections. See Figure 9 for clamp assembly details.

Digitized by the Internet Archive
in 2023 with funding from
Amateur Radio Digital Communications, Grant 151

https://archive.org/details/telexorderno388s00unse_0

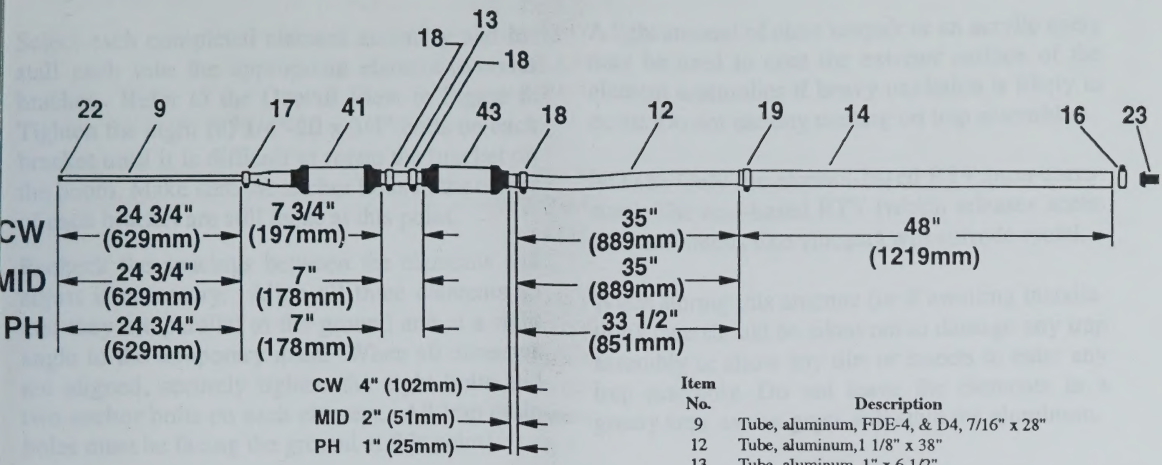

Item No.	Description
9	Tube, aluminum, FDE-4, & D4, 7/16" x 28"
12	Tube, aluminum,1 1/8" x 38"
13	Tube, aluminum, 1" x 6 1/2"
14	Tubing Assy., alum, RDE-1, FDE-1, & D-1, 1 1/4" x 48"
16	Clamp, tubing, 1 1/4"
17	Clamp, #6, tubing
18	Clamp, #10 tubing
19	Clamp, #16 tubing
22	Caplug, 7/16"
23	Insulator, driven element
41	Trap Beam, DE 15M
43	Trap Beam, 10M

Figure 6
Driven Element Assembly

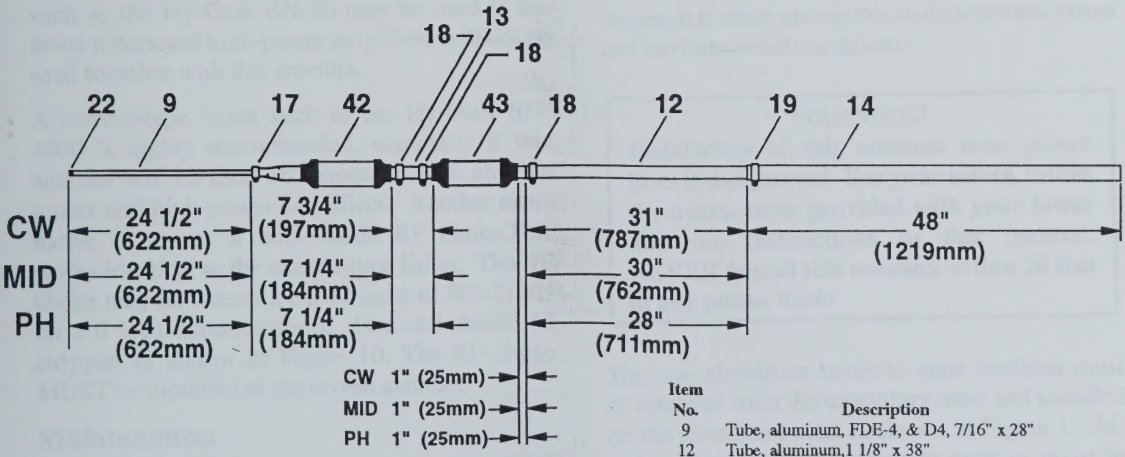

Item No.	Description
9	Tube, aluminum, FDE-4, & D4, 7/16" x 28"
12	Tube, aluminum,1 1/8" x 38"
13	Tube, aluminum, 1" x 6 1/2"
14	Tubing Assy., alum, RDE-1, FDE-1, & D-1, 1 1/4" x 48"
17	Clamp, #6, tubing
18	Clamp, #10 tubing
19	Clamp, #16 tubing
22	Caplug, 7/16"
42	Trap Beam, 15M
43	Trap Beam, 10M

Figure 7
Director Assembly

Select each completed element assembly and install each into the appropriate element-to-boom bracket. Refer to the Overall View in Figure 8. Tighten the eight (8) 1/4"-20 x 3/4" bolts on each bracket until it is difficult to rotate the bracket on the boom. Make sure the anchor bolts in the center of each bracket are still loose at this point.

Recheck the spacings between the elements and adjust if necessary. Align all three elements so that they are parallel to the ground and at a right angle to the temporary mast. When all elements are aligned, securely tighten the eight bolts and two anchor bolts on each element. All trap drain holes must be facing the ground at this point!

Beta Match Assembly

Select the beta match rods (Item 9), beta match clamps (Item 2), and#10-24 hardware. Assemble as shown in Figure 9.

Balun Choices

The TH3-MK4 does not include a balun, however it is recommended that a balun or coaxial RF choke be used at the feedpoint. A voltage-balun such as the Hy-Gain BN-86 may be used if antenna tuners and high-power amplifiers will not be used together with this antenna.

A current-type balun such as the Hy-Gain BN-4000 is highly recommended, especially if this antenna will be used off-resonance with antenna tuners and high-power amplifiers. Another alternative is to use a home-made RF choke.This works identical to the current-type balun. The RF choke may be wound from 12 turns of RG-213/U on a 6 inch diameter form. One end should be stripped as shown in Figure 10. The RF choke MUST be mounted at the driven element.

Maintenance

Hy-Gain now recommends genuine Penetrox-A® from Burndy Corporation for use as an anti-electrolytic compound within element tubing assemblies. This prevents aluminum oxide from forming on the aluminum surface, thereby maintaining high electrical conductivity between element sections, especially in coastal environments. Penetrox-A® may be obtained from your local electrical supply store. Electro-Seal® may be used in place of Penetrox-A.

A light amount of clear lacquer or an acrylic spray may be used to coat the exterior surface of the element assemblies if heavy oxidation is likely to occur. Do not use any coating on trap assemblies.

NOTE: Only use alcohol-based RTV (non-corrosive). The acid-based RTV (which releases acetic acid and smells like vinegar) will corrode metal.

When storing this antenna (or if awaiting installation), care should be taken not to damage any trap assembly or allow any dirt or insects to enter any trap assembly. Do not leave the elements in a grassy area, as wet grass will stain the aluminum.

Installation

Double-check all dimensions and tighten all connections before installation. Ensure that all trap drain holes will be facing the ground.

Check all plastic trap caps to ensure tightness and correct dimensions. Also, make sure that the drain holes in the trap caps are aligned with the other holes. Since this is a narrow-bandwidth antenna design, it is more susceptible to dimensional errors and environmental conditions!

WARNING!

Installation of this antenna near power lines is dangerous! For your safety, follow the instructions provided with your tower and the instructions in this manual. NEVER install this antenna within 20 feet of any power lines!

The cast aluminum boom-to-mast brackets must be removed from the temporary mast and installed on the permanent mast as shown in Figure 1. Attach a gin pole to the tower or mast to assist in lifting the antenna. There must be at least two (2) people available when installing this antenna. DO NOT try to install this antenna by yourself!

Eletroseal® is a registered trademark of Town and Country Plastics, Inc.
Cycolac® is a registered trademark of Borg-Warner Chemical, Inc.
Penetrox-A® is a registered trademark of the Burndy Corporation.
Skotchkote® is a registered trademark of 3M.

Attach the lifting rope to the balance point of the antenna. The lifting rope should be fed through the gin pole or other pulley arrangement attached to the tower. The other end should be at ground level, available to the ground crew for lifting.

When the antenna reaches the mast bracket, pin the antenna to the cast brackets with a single 5" bolt.

This takes the weight of the antenna off the lifting rope and allows the person at the top of the tower to tilt the antenna up, so that the other three 5" bolts may be installed.Tighten all four of the 5/16"-18 x 5" bolts (Item 33) securely. Check the direction of the antenna for use in calibrating your rotator and reposition if necessary. Tape the coaxial cable to the mast, leaving a loop for rotation. This completes your installation of the TH3-MK4.

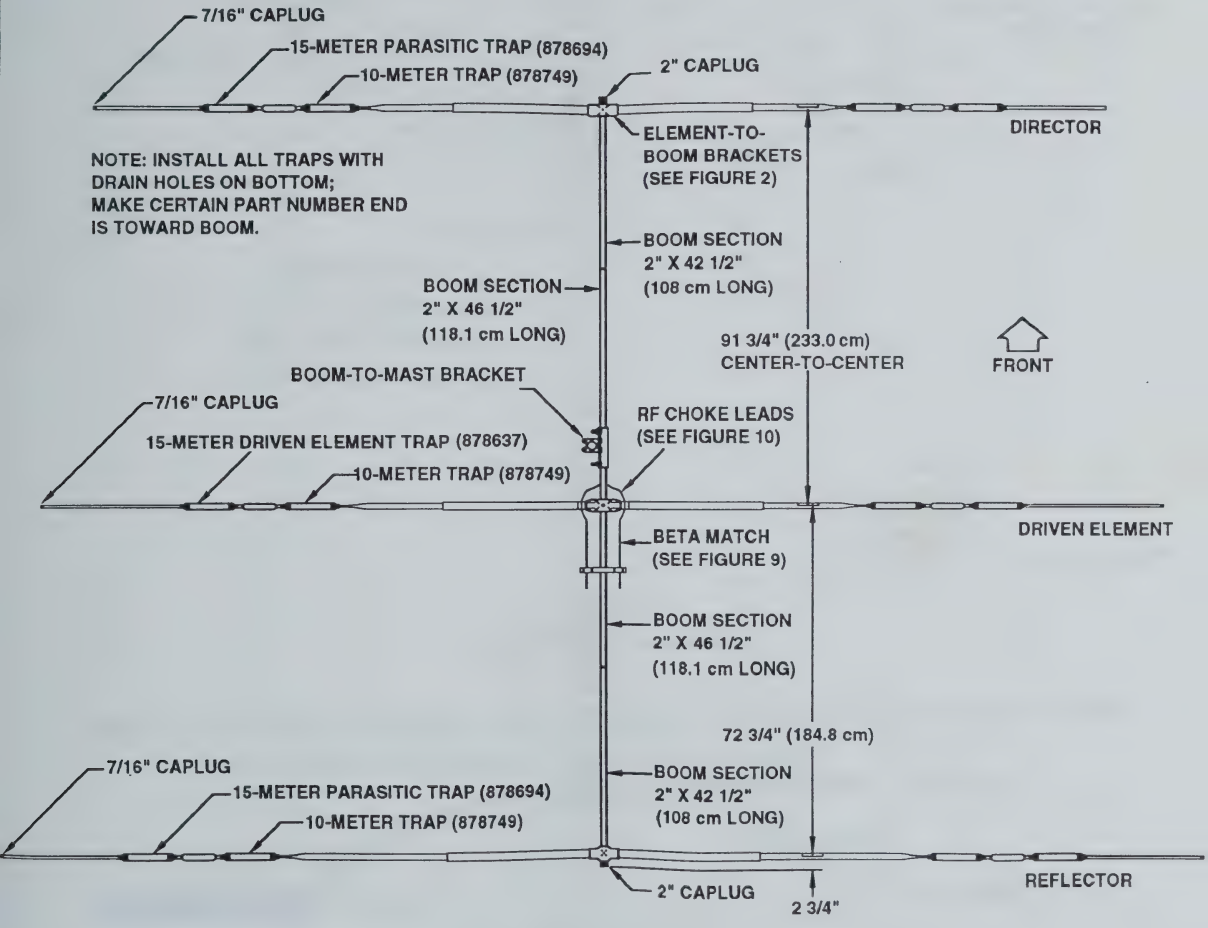
7/16" CAPLUG
15-METER PARASITIC TRAP (878694)
10-METER TRAP (878749)
2" CAPLUG
DIRECTOR
ELEMENT-TO-BOOM BRACKETS (SEE FIGURE 2)
NOTE: INSTALL ALL TRAPS WITH DRAIN HOLES ON BOTTOM; MAKE CERTAIN PART NUMBER END IS TOWARD BOOM.
BOOM SECTION 2" X 42 1/2" (108 cm LONG)
BOOM SECTION 2" X 46 1/2" (118.1 cm LONG)
91 3/4" (233.0 cm) CENTER-TO-CENTER
FRONT
BOOM-TO-MAST BRACKET
7/16" CAPLUG
RF CHOKE LEADS (SEE FIGURE 10)
15-METER DRIVEN ELEMENT TRAP (878637)
10-METER TRAP (878749)
DRIVEN ELEMENT
BETA MATCH (SEE FIGURE 9)
BOOM SECTION 2" X 46 1/2" (118.1 cm LONG)
72 3/4" (184.8 cm)
7/16" CAPLUG
15-METER PARASITIC TRAP (878694)
10-METER TRAP (878749)
BOOM SECTION 2" X 42 1/2" (108 cm LONG)
REFLECTOR
2" CAPLUG
2 3/4"

Figure 8
Overall View

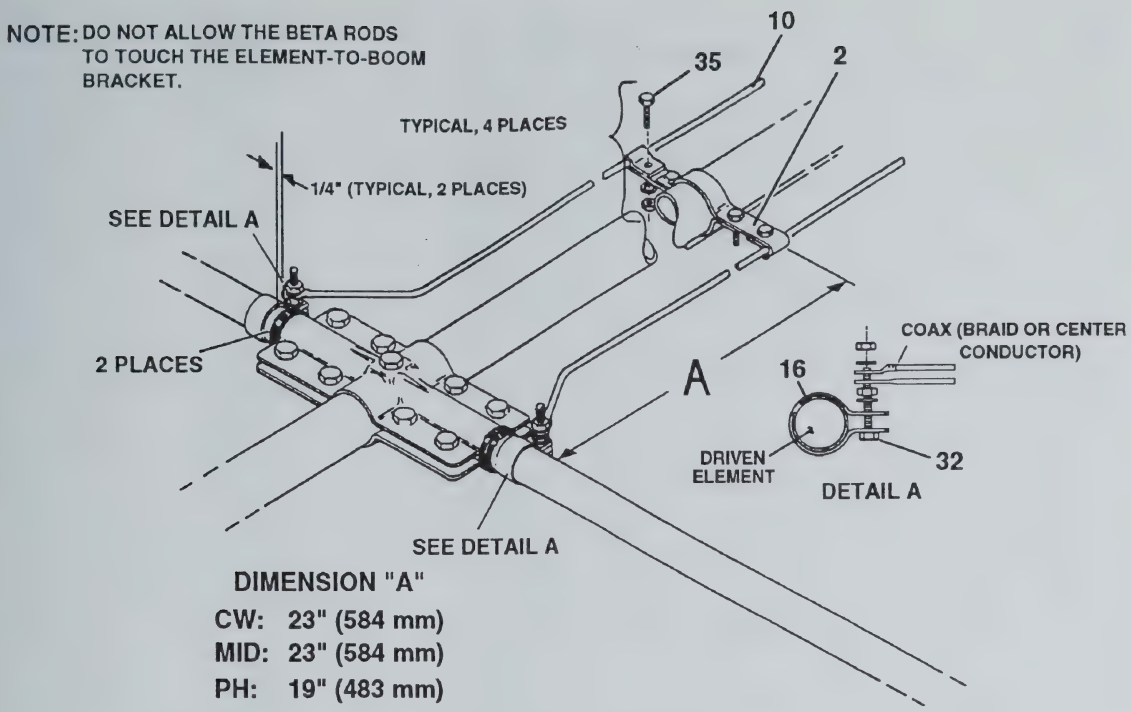

Item No.	Description
2	Clamp, beta shorting
10	Beta rod, 1/4" x 30"
16	Cla mp, tubing, 1 1/4"
32	Bolt, #10-24 x 1 1/2", hex head, stainless steel
35	Bolt, #10-24 x 1"

Figure 9
Beta Match Assembly

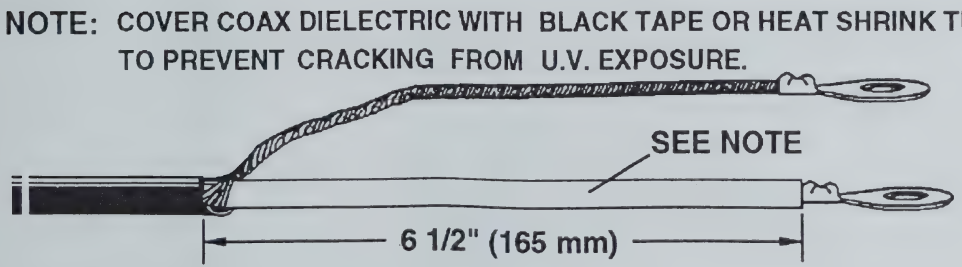
NOTE: COVER COAX DIELECTRIC WITH BLACK TAPE OR HEAT SHRINK TUBING TO PREVENT CRACKING FROM U.V. EXPOSURE.
SEE NOTE
6 1/2" (165 mm)

Figure 10
Stripping RF Choke

Parts List

Item No.	Part No.	Description	Qty
1	102734	Mast Bracket, cast aluminum	2
2	163371	Clamp, beta shorting	2
3	165919	Bracket, Element-to-boom, #13	4
4	165920	Bracket, Element-to-boom, #14	2
5	172732	Clamp, Boom to bracket	1
6	172735	Bracket, Casting to boom	1
7	179892	Tube, 2" x .049 x 42-1/2", drilled	2
8	179893	Tube, 2" x .049 x 46-1/2", swaged	2
9	178558	Tube, aluminum, FDE-4 & D4, 7/16" x 28"	6
10	179786	Beta rod, 1/4" diameter, x 30"	2
11	190300	Tube, element section #2, 1 1/8" x 48"	2
12	190307	Tube, aluminum, 1 1/8" x 38"	4
13	190605	Tube, aluminum, 1" x 6 1/2"	6
14	190900	Tubing Assy., aluminum, RDE-1, FDE-1, & D-1, 1 1/4" x 48"	6
15	870557	Parts Pack Clamps TH3MK4	1
16	171333	Clamp, tubing, 1 1/4"	2
17	358756	Clamp, #6 tubing	6
18	358757	Clamp, #10 tubing	18
19	358758	Clamp, #16 tubing	6
20	870558	Parts Pack Insululator TH3MK4	1
21	455625	Caplug, 2"	2
22	455644	Caplug, 7/16"	6
23	465833	Insulator, driven element	2
24	870559	Parts Pack, 1/4" TH3MK4	1
25	500156	Bolt, 1/4"-20 x 3/8", hex head, stainless steel	6
26	505266	Bolt, 1/4"-20 x 3/4", hex head, stainless steel	30
27	551367	Nut, 1/4"-20, square, stainless steel	6
28	554099	Nut, 1/4"-20, hex, stainless steel	34
29	562961	Lockwasher, 1/4", internal, stainless steel	34
30	505734	Bolt, 1/4"-20 x 21/2", hex head	2
31	870560	Parts Pack, #10, 5/16 TH3MK4	1
32	500159	Bolt, #10-24 x 1 1/2", hex head, stainless steel	2
33	500349	Bolt, 5/16"-18 x 5", hex head, stainless steel	4
34	500392	Bolt, 5/16"-18 x 3", hex head, stainless steel	2
35	504069	Bolt, #10-24 x 1", hex head, stainless steel	4
36	506968	Bolt, 5/16"-18 x 2 3/4", hex head, stainless steel	2
37	554071	Nut, #10-24 hex, stainless steel	8
38	555747	Nut, 5/16"-18, hex, stainless steel	8
39	564792	Lockwasher, 5/16", split, stainless steel	12
40	565697	Lockwasher, internal, #10, stainless steel	10
41	878637	Trap Beam, DE 15M	2
42	878694	Trap Beam, 15M	4
43	878749	Trap Beam, 10M	6

Service Information

If you experience problems with your Hy-Gain product, you should contact:

Hy-Gain Customer Service Department
Lincoln, NE.
Phone Number: 402-467-5321 or 402-465-7087.

For parts, phone:
(402) 465-7022

Converting American Measurements to Metric

Use this scale to identify lengths of bolts, diameters of tubes, etc,. The American inch (") and foot (') can be converted to centimeters in this way.

1 inch (1") = 2.54 cm
1 foot (1') = 30.48

Example:
42" x 2.54 = 106.7 cm

PRINTED IN U.S.A.
Copyright© 1996 by Telex
TELEX COMMUNICATIONS, INC.
All rights reserved
AUG 1996

97048

TELEX hy-gain

TELEX COMMUNICATIONS, INC.

9600 Aldrich Ave., So. Minneapolis, MN 55420 U.S.A.

ORDER NO. 242S

Model BN-86 Balun

Voltage-type Balanced-to-Unbalanced Transformer PN 804217-4

INSTRUCTION MANUAL

General Description

This balun is a ferrite, balanced to unbalanced, antenna matching device. With a transformation ratio of 1:1, the balun will couple into any 50 ohm balanced system such as dipoles, multiband doublets and beam antennas.

This balun is supplied with stainless steel hardware except for eyebolts.

For higher power and higher VSWR, use the Hy-Gain BN-4000 current-type balun rated at 2000 watts ave., 4000 watts PEP.

CAUTION

DO NOT use this balun with any type of antenna tuner or match box when the VSWR (before matching) is greater than 3:1. If the VSWR is below 3:1, a match box can be used as long as the power levels are kept below the limits shown in the Specifications. When these power and VSWR limits are exceeded, the extremely high standing wave voltage present at the feedpoint causes the breakdown voltage of the balun to be exceeded.

Specifications

Electrical

Impedance	50 ohms
Frequency Range	3 to 30 MHz
Insertion Loss	negligible (less than 1 dB)
SSB/CW Power Handling Capabilities	1500 W PEP, 800 Ave at less than 2:1 VSWR 500 W PEP at less than 3:1 VSWR
RTTY Power Handling Capabilities	500 W continuous at less than 2:1 VSWR

Mechanical

Weight	1 lb. (0.45 kg)
Dimensions	3 1/4" x 6 1/4" (8.3 cm x 15.9 cm)
Input Receptacle	SO-239
Output Receptacle	standard terminal lugs
Weather Protection	weatherproof housing with condensing drain opening
Housing Material	highimpact injection molded, Cycolac® plastic

Mounting on Boom or Mast

Refer to Figures 1 and 2.

Place U-bolt around mast or boom - diameter 1 3/8" to 2 3/8".

Place balun against mast or boom and insert the U-bolt through the holes on the sides of the balun.

Cycolac® is a registered trademark of Borg-Warner

AA-0242-C-001

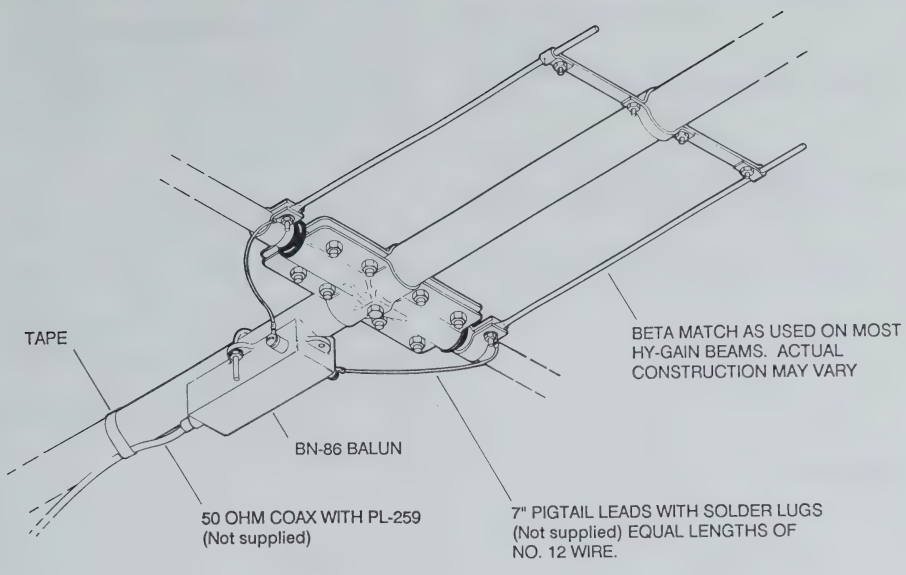
TAPE
BETA MATCH AS USED ON MOST HY-GAIN BEAMS. ACTUAL CONSTRUCTION MAY VARY
BN-86 BALUN
50 OHM COAX WITH PL-259 (Not supplied)
7" PIGTAIL LEADS WITH SOLDER LUGS (Not supplied) EQUAL LENGTHS OF NO. 12 WIRE.

Figure 1
Typical Balun Installation

AA-0242-C-004

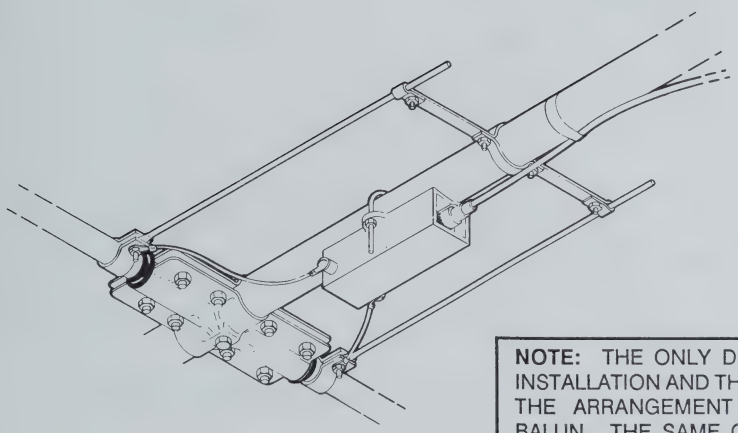

NOTE: THE ONLY DIFFERENCE BETWEEN THIS INSTALLATION AND THE TYPICAL INSTALLATION IS THE ARRANGEMENT AND LOCATION OF THE BALUN. THE SAME CALLOUTS APPLY TO BOTH ILLUSTRATIONS.

Figure 2
Alternate Balun Installation

Tighten all hardware securely. Connect the leads to the driven element. (See Note)

Connect the coax to the receptacle on the balun.

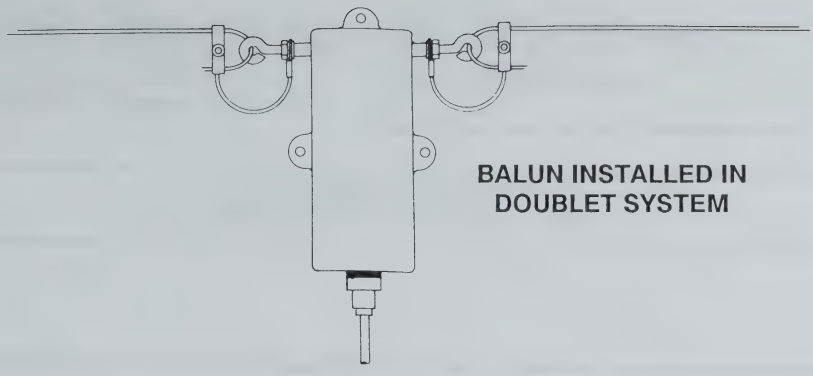

Figure 4
Typical Doublet Antenna Arrangement

Weatherproofing

The coaxial connection may be weatherproofed with hand-moldable plastic Coax-Seal®. This substance should be applied liberally to the connection and pushed into tight areas for complete sealing.

CAUTION
This substance permanently seals the coaxial connection and is very difficult to remove from the connector.

Customer Service

If you require any assistance in resolving a problem with a Telex/Hy-Gain product, please phone: 612-887-5528 or 612-884-4051. To order parts phone: 402-467-5321 and ask for Customer Service, or 402-465-7022 direct.

PARTS LIST

Part No.	Description	Qty
873424	Balun Assembly	1
872079	Parts Pack, 242S	1
540087	U-bolt, #10-24 x 2 1/2" x 2 3/4" stainless steel	1
540066	Eyebolt, 1/4" x 1 1/2"	2
554099	Nut, hex, 1/4"-20	4
554071	Nut, hex, #10-24	2
562961	Lockwasher, internal, 1/4"	5
500156	Bolt, hex head, 1/4"-20 x 3/8"	2
850050	Coax-Seal®	1

Coax-Seal® is a registered trademark of Universal Electronics, Inc.

PRINTED IN U.S.A.
Copyright © 1992 by Telex
TELEX COMMUNICATIONS, INC.
All rights reserved
10 JAN 1992

TELEX® hy-gain®
TELEX COMMUNICATIONS, INC.
9600 Aldrich Ave. So., Minneapolis, MN 55420

BALUN BN-86
HIGH POWER USE

PN 802170

ADDENDUM

WARNING

When using RTTY (ASCII, AMTOR, Baudot, Packet, etc.) on this antenna with the Hy-Gain BN-86 50 ohm balun, DO NOT exceed 500 watts continuous output power.

On SSB and CW, which exhibits a lower duty cycle, this antenna with the BN-86 will easily handle 1500 watts PEP, or 800 watts average power output.

If higher power levels than these are anticipated, it is recommended that a coaxial RF choke or a toroid-type balun be used.

Printed in U.S.A.
Copyright© 1988 by Telex
TELEX COMMUNICATIONS, INC.
All rights reserved
13 SEPT 1988

ADDENDUM